Energy 42 (2012) 57–67

Contents lists available at SciVerse ScienceDirect

Energy

journal homepage: www.elsevier.com/locate/energy

Modeling of the photovoltaic cell circuit parameters for optimum connection model and real-time emulator with partial shadow conditions

Riad Kadri [a], Horia Andrei [b], Jean-Paul Gaubert [a,*], Traian Ivanovici [b], Gérard Champenois [a], Paul Andrei [c]

[a] Automatic Control and Industrial Data Processing Laboratory of Poitiers (LAII), Poitiers National School of Engineering (ENSIP), University of Poitiers, 2 rue Pierre Brousse, Bâtiment B25, B.P. 633, 86022 Poitiers Cedex, France
[b] Department of Automatics, Informatics, and Electrical Engineering, Valahia University of Targoviste, 18-20, Boulv. Unirii, 130082 Targoviste, Romania
[c] Department of Electrical Engineering, Politehnica University of Bucharest, 313, Splaiul Independentei, 060042 Bucharest, Romania

ARTICLE INFO

Article history:
Received 22 January 2011
Received in revised form
1 October 2011
Accepted 12 October 2011
Available online 8 November 2011

Keywords:
Photovoltaic (PV) cell and array
Circuit parameters
Matrix equations
Maximum power point tracking (MPPT)
Lab view application
Real-time PV emulator

ABSTRACT

Photovoltaic (PV) power has been successfully used for over five decades. The output characteristics of a PV array vary nonlinearly when temperature or irradiance conditions change. At the beginning of this paper, the performance of PV panel is analyzed, for parallel and series connections of solar cell elements exposed to the same light conditions and temperature by using the Brune's conditions of interconnection. Therefore the parameters of the equivalent circuits for each typical PV cell connections are characterized by a new set of matrix equations. A Lab View application is implemented to prove the theoretical models. Moreover, the grid connected PV systems have become more popular because they do not need battery back-ups to ensure maximum power point tracking (MPPT). However, partial shading is one of the main causes that reduces energy yield of PV array. In this respect, the second part of the paper refers to the influences of different irradiance conditions on the PV array performance in order to achieve MPPT under shaded array conditions. Consequently, PV array emulator is crucial for the operational evaluation of system components. The purpose of this study extension is to design and develop a new real-time emulator of PV array output characteristics based on closed-loop reference model.

© 2011 Elsevier Ltd. All rights reserved.

1. Introduction

Solar PV systems technologies have known an extensive research for over five decade [1–4]. The evolution of PV array is leading to the design and installation of more and more largely sized PV plants. Then, when the plant size increases, the structure of the PV plant is determined by suitable parallel and series connections of the PV cells, forming the PV array that lies under the same DC/AC converter. The complexity of the PV array (in terms of parallel and series connections) is introducing new aspects to be analyzed. To solve the PV panel maximum power point (MPP) problem for typical PV cells connections is utterly important in order to improve the overall system efficiency [5,6]. This point acts upon the annual energy production of a grid-connected photovoltaic systems and the different way for evaluating then [7].

Typically, a solar panel comprises cells in parallel or series connection. In order to characterize the equivalent circuit for each connection, we propose a new set of matrix equations. Based on the classical circuit theory and Brune's conditions for each type of PV cell connection, an equation system which links the output and input is stated. A specific Lab View application is implemented in order to establish a reference equivalent model of the PV cell and of their connections in the same conditions of irradiance and temperature. Thus, it is possible to use a real set of measurements and characteristics, and to analyze the parameters of the PV cell in different connections as an equivalent circuit.

The output characteristics of PV array depend on the environmental conditions. For any solar panel, the output power is function of the temperature and the irradiance values of the site where the panel is placed. This power can decrease or increase as result of any temperature and/or shining variations. Afterward, with the intention to extend modeling to the behavior of PV array, our study is focused on series connections and the taking into account of shadow phenomena. Other authors are investigated different connection configurations of PV cells to compare their performance under condition of partial shading [8]. The configuration synoptic when the PV array is in series connection is explained and simulation results are exposed with typical I–V or P–V characteristics in homogenous irradiance conditions or not. In order to reproduce

* Corresponding author. Tel.: +33 (0) 549453678; fax: +33 (0) 549454034.
E-mail addresses: hr_andrei@yahoo.com (H. Andrei), jean.paul.gaubert@univ-poitirs.fr (J.-P. Gaubert), traian_20@yahoo.com (T. Ivanovici), sus_ace@yahoo.com (P. Andrei).

0360-5442/$ – see front matter © 2011 Elsevier Ltd. All rights reserved.
doi:10.1016/j.energy.2011.10.018

these characteristics in real conditions like with a PV array, a real-time emulator of PV experimental test bench is described. The proposed system consists of a programmable power supply, which is controlled by a dSPACE DS1104 board under the Matlab/Simulink™ environment. The control software uses feedback of the output voltage, current and reference model to regulate through PI regulator the actual operating point for the connected load. The experimental results show that the output characteristics of the emulator are very close to those of the actual PV cells with dynamic characteristics much lower than the possible climatic variations. This dynamic response of the PV array emulator is of particular importance in order to avoid any significant impact on the MPPT and current control of the inverter.

Section 2 introduces the aspects referring to circuit matrix equations and equivalent circuits for typical connections of the PV cell, for idealized case of the same conditions of irradiance and temperature. The Lab View application for PV cells in parallel and series connection is presented in Section 3. Section 4 describes the PV array connected in grid. Section 5 illustrates the development of the theoretical analysis leading to partially shaded PV array. Section 5.2 describes the simulation and experimental results for PV array with three irradiance levels. Section 6 concludes this paper.

2. Photovoltaic cell circuit model

The parameters of the PV cells are evaluated here by using the classical circuit theory and equivalent model for each typically connection.

2.1. Equivalent circuit of PV cell

Many equivalent circuits have been proposed in the literature in order to assess the behavior of the PV cell [9–15]. A more simplified model can be used, in which the equivalent circuit of the solar cell has been implemented by using the one-exponential model with a single diode.

PV cells consist of a silicon p-n junction that when exposed to light release electrons around a closed electrical circuit. From this physical interpretation of the photoelectric effect the equivalent circuit of a solar cell can be modeled through the circuit shown in Fig. 1. These electrons are then free to move across the junction due to the built-in potential (V_d) and create a current. This is modeled by the light generated current source I_{ph}. The intrinsic silicon p-n junction characteristic is simulated as a diode in the circuit equivalent. During darkness, the solar cell is not an active device, it works as a diode, i.e. a p-n junction. It produces neither a current nor a voltage. The output of the current source is directly proportional to the light falling on the cell (photocurrent). The photon generated current source I_{ph} is in fact related with solar irradiance as

$$I_{ph} = [I_{sc} + k_I(T - 298)]\,\frac{G}{1000} \tag{1}$$

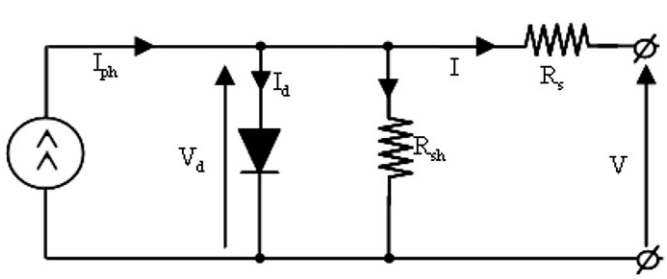

Fig. 1. PV cell equivalent circuit.

where $K_I = 0.0017$ A/oC is cell's short-circuit current temperature coefficient, I_{sc} is cell's short-circuit current at 25 °C, T is the cell's temperature and G is the solar irradiance in W/m^2. In terms of studying the energy transferred from the "solar source" to PV cell, the *2-terminal* of the current source can be considered *1-port* for the equivalent circuit, or an input port. The notion of a *port* is a fundamental concept for the energy exchange between a circuit and its environment, and between interconnected subcircuits. Interconnection leads to terminals that share their potential and current (up to a sign), while energy transfer occurs through ports. Terminal connection is a *local* operation, while energy involves several terminals simultaneously (in this case two), and is therefore *action at a distance* [16,17]. From this premise it is possible to consider that the input current and voltage of PV cell is I_{ph}, respectively V_d. Thus, the input power of PV cell (electric power) convert by the photoelectric effect can be defined as

$$P_{in} = V_d I_{ph} \tag{2}$$

At the output *2-terminal* of the PV cell, the relationship between the outputs current I and voltage V, is known as the I–V characteristic of the PV cell. For the directions of currents and voltages indicated by arrows in Fig. 1, the I–V characteristic is defined by

$$I = I_{ph} - I_d - \frac{R_s I + V}{R_{sh}} \tag{3}$$

where R_{sh} and R_s are the shunt (representing the effect of the surface current dispersion), and respectively, series resistance (representing the effect of the voltage drop of the semiconductor and contacts) of a PV cell, $I_d = I_{sd}[\exp((q/nkT)(R_s I + V)) - 1]$ is diode's current, I_{sd} is diode's saturation current, $k = 1.3807 \times 10^{-23}$ JK^{-1} is Boltzmann's constant, $q = 1.6022 \times 10^{-19}$ C is the electronic charge, and n is the quality factor of the p-n junction of the diode.

Letting at the output terminal $I = 0$, and $R_{sh} \to \infty$ for simplicity, solving for V yields the open-circuit voltage of the PV cell

$$V_{oc} = V_d = \frac{nkT}{q}\ln\left(\frac{I_{ph}}{I_{sd}} + 1\right) \approx \frac{nkT}{q}\ln\left(\frac{I_{ph}}{I_{sd}}\right) \tag{4}$$

Applying a short-circuit to the cell's output 2-terminal, the output voltage $V = 0$ and the average current through diode is generally neglected, so the short-circuit current I_{sc} is expressed by

$$I_{sc} = \frac{I_{ph}}{1 + \frac{R_s}{R_{sh}}} \cong I_{\mathrm{ph}} \tag{5}$$

The output power P of the PV cell is defined as

$$P = VI \tag{6}$$

thus, by used (3), can be written explicitly as

$$P = VI_{ph} - I_{sd}\left[\exp\left(\frac{q}{nkT}(R_s I + V)\right) - 1\right] V - \frac{(R_s I + V)V}{R_{sh}} \tag{7}$$

In order to improve the PV system efficiency, it is necessary that the operating point of the system to be the MPP value of the PV cell. The MPP value occurs when

$$\left.\frac{\mathrm{d}P}{\mathrm{d}V}\right|_{V_{\mathrm{MPP}}, I_{\mathrm{MPP}}} = 0 \tag{8}$$

so that

$$\frac{dP}{dV} = (I_{ph}+I_{sd}) - I_{sd}\exp\left(\frac{q}{nkT}(R_sI_{MPP}+V_{MPP})\right)\left(1+\frac{q}{nkT}V_{MPP}\right) - \frac{2V_{MPP}+R_sI_{MPP}}{R_{sh}} = 0 \quad (9)$$

On the other hand, the complete characterization of PV cell is described by five model parameters (R_{sh}, I_{sc}, I_{sd}, R_s, I_{ph}) which are representative for the physical behavior of PV cell/panel. These parameters of PV cell are in fact related to two environmental conditions: the solar irradiance and the temperature. Only the effects of different solar irradiance are considered in this paper.

The determination of these model parameters is not straightforward owing to non-linear nature of Eq. (3). A numerical procedure is used for evaluation of PV cell's parameters. The steady-state parameters R_{sh} and I_{sc} are estimated from the I–V characteristic of PV cell for different levels of G. The parameter R_{sh} can be directly identified from the slope of the quasi-horizontal portion of the curve I–V, while I_{sc} is the intercept with the vertical axis of the straight line representing the slope of the I–V characteristic. The other parameters I_{sd}, R_s, and I_{ph} are obtained from an iterative procedure based on the following non-linear steady-state equations solved in a numerical way:

- open circuit ($I = 0$):

$$I_{ph} - I_{sd}\left[e^{\frac{qV_{oc}}{nkT}} - 1\right] - \frac{V_{oc}}{R_{sh}} = 0 \quad (10)$$

- short-circuit($V = 0$):

$$I_{ph} - I_{sd}\left[e^{\frac{qR_sI_{sc}}{nkT}} - 1\right] - \frac{R_s}{R_{sh}}I_{sc} = 0 \quad (11)$$

- MPP (V_{MPP}, I_{MPP}):

$$I_{MPP} - I_{ph} + I_{sd}\left[e^{\frac{q(R_sI_{MPP}+V_{MPP})}{nkT}} - 1\right] + \frac{R_sI_{MPP}+V_{MPP}}{R_{sh}} = 0 \quad (12)$$

2.2. Matrix equations of PV cell

The matrix equations of the networks may be defined as a part of an electrical system [18–20]. The input port 1–1' accepts a source and the output port 2–2' is connected to a load, shown in Fig. 2.

Based on the classical circuit theory the behavior of active network is described by several set of equations, which indicate the voltage–current relationships for each port and also how the currents and voltages are interrelated at the input and output ports. We assume that the admittance equation describes the parallel–parallel connection of networks, and is defined by

$$\begin{bmatrix} I_{in} \\ I_{out} \end{bmatrix} = \begin{bmatrix} Y_{11} & Y_{21} \\ Y_{21} & Y_{22} \end{bmatrix}\begin{bmatrix} V_{in} \\ V_{out} \end{bmatrix} + \begin{bmatrix} I_{sc,in} \\ I_{sc,out} \end{bmatrix} \quad (13)$$

where $\mathbf{Y} = \begin{bmatrix} Y_{11} & Y_{21} \\ Y_{21} & Y_{22} \end{bmatrix}$ is called the admittance matrix, and $I_{sc,in}$, $I_{sc,out}$ are the short-circuit currents at the input respectively output port, defined by the conditions $V_{in} = 0$, and $V_{out} = 0$.

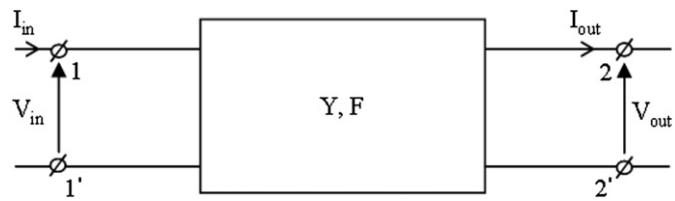

Fig. 2. Input–output port of the network.

The parallel–series connection of networks is described by the matrix equation

$$\begin{bmatrix} I_{in} \\ V_{out} \end{bmatrix} = \begin{bmatrix} G_{11} & G_{21} \\ G_{21} & G_{22} \end{bmatrix}\begin{bmatrix} V_{in} \\ I_{out} \end{bmatrix} + \begin{bmatrix} I_{sc,oc,in} \\ V_{sc,oc,out} \end{bmatrix} \quad (14)$$

where $\mathbf{G} = \begin{bmatrix} G_{11} & G_{21} \\ G_{21} & G_{22} \end{bmatrix}$ is called the hybrid matrix, and $I_{sc,oc,,in}$, $V_{sc,oc,out}$ are the input current and the output voltage, defined by the conditions $V_{in} = 0$, and $I_{out} = 0$.

PV cell can be characterized by a set of equations similar to relations (13) and (14) of the network. We assume that for the input port $I_{ph} = I_{in}$, $V_d = V_{in}$, and for the output terminals $I = I_{out}$, $V = V_{out}$. Using equation (3) and Kirchhoff's laws, results for PV cell the matrix admittance equations for parallel connection

$$\begin{bmatrix} I_{ph} \\ I \end{bmatrix} = \begin{bmatrix} \left(\frac{1}{R_s}+\frac{1}{R_{sh}}\right) & -\frac{1}{R_s} \\ \frac{1}{R_s} & -\frac{1}{R_s} \end{bmatrix}\begin{bmatrix} V_d \\ V \end{bmatrix} + \begin{bmatrix} I_d \\ 0 \end{bmatrix} \quad (15)$$

respectively the matrix equation described by the hybrid transfer parameters for series connection

$$\begin{bmatrix} I_{ph} \\ V \end{bmatrix} = \begin{bmatrix} \frac{1}{R_{sh}} & 1 \\ 1 & -R_s \end{bmatrix}\begin{bmatrix} V_d \\ I \end{bmatrix} + \begin{bmatrix} I_d \\ 0 \end{bmatrix} \quad (16)$$

In this way, for the PV cell it is possible to identify the admittance matrix

$$\mathbf{Y} = \begin{bmatrix} \left(\frac{1}{R_s}+\frac{1}{R_{sh}}\right) & -\frac{1}{R_s} \\ \frac{1}{R_s} & -\frac{1}{R_s} \end{bmatrix} \quad (17)$$

and the hybrid matrix

$$\mathbf{G} = \begin{bmatrix} \frac{1}{R_{sh}} & 1 \\ 1 & -R_s \end{bmatrix} \quad (18)$$

which contains the parameters R_s and R_{sh} of the PV cell.

Each parameter of the matrix **Y** and **G** can be defined in terms of input–output voltage or current. For example, the parameter $Y_{21} = I/V_d = 1/R_s|_{V=0}$ represents the transfer admittance when at the output 2-terminals is a short-circuit, and the parameter $G_{21} = V/V_d = 1|_{I=0}$ represents the voltage amplification when at the output 2-terminals is a open-circuit.

2.3. Connections of the PV cell

In practical terms a solar panel comprises n_s *PV* cells in series or n_p PV cells in parallel, interconnected at the output terminals [21,22]. Considering that the PV cells are identically and they are

influenced by the same environmental conditions - equal temperature T and equal irradiance G - then, relation (2) indicates that the electric power generated by the current source is the same for each cell. Then, from this point of view one can establish a rule for PV cells connection: a "parallel" connection is considered at the input port. In this way, the input voltage V_d will have the same value for all PV cells. Moreover, as a consequence of relation (1), in the same environmental conditions the current source I_{ph} has the same value for all PV cells.

For parallel–parallel, and parallel–series connection of PV cells will be established a sets of equations and equivalent transfer matrix that take into consideration Brune's conditions of interconnection.

A parallel–parallel connection of n_p identically PV cell, shown in Fig. 3, a, is defined by the Brune's interconnection conditions [23,24],

$$V_{de} = V_{d1} = V_{d2} = \ldots = V_{d,n_p} = V_d;\ V_e = V_1 = V_2 = \ldots = V_{n_p} = V;\ I_e = \sum_{k=1}^{n_p} I_k;\ I_{ph,e} = \sum_{k=1}^{n_p} I_{ph} \tag{19}$$

and, from Eqs. (2), (10)–(12), for the same environmental conditions, results

$$I_{ph1} = I_{ph2} = \ldots = I_{ph,n_p} = I_{ph};\ I_1 = I_2 = \ldots = I_{n_p} = I;\ P_{in1} = P_{in2} = \ldots = P_{in,n_p} = P_{in} \tag{20}$$

For the equivalent circuit of n_p identically PV cells, shown in Fig. 3b, the Eq. (15) becomes

$$\begin{bmatrix} I_{ph,e} \\ I_e \end{bmatrix} = \begin{bmatrix} \sum_{k=1}^{n_p} I_{ph} \\ \sum_{k=1}^{n_p} I \end{bmatrix} = \begin{bmatrix} n_p I_{ph} \\ n_p I \end{bmatrix} = \begin{bmatrix} n_p\left(\frac{1}{R_s}+\frac{1}{R_{sh}}\right) & -\frac{n_p}{R_s} \\ \frac{n_p}{R_s} & -\frac{n_p}{R_s} \end{bmatrix} \begin{bmatrix} V_d \\ V \end{bmatrix} + \begin{bmatrix} n_p I_d \\ 0 \end{bmatrix} \tag{21}$$

The equivalent admittance matrix is

$$\mathbf{Y}_e = n_p \mathbf{Y} \tag{22}$$

The input power (2) of the equivalent circuit is

$$P_{in,e} = V_{d,e} I_{ph,e} = n_p V_d I_{ph} = n_p P_{in} \tag{23}$$

The output power (7) of the equivalent circuit is given by

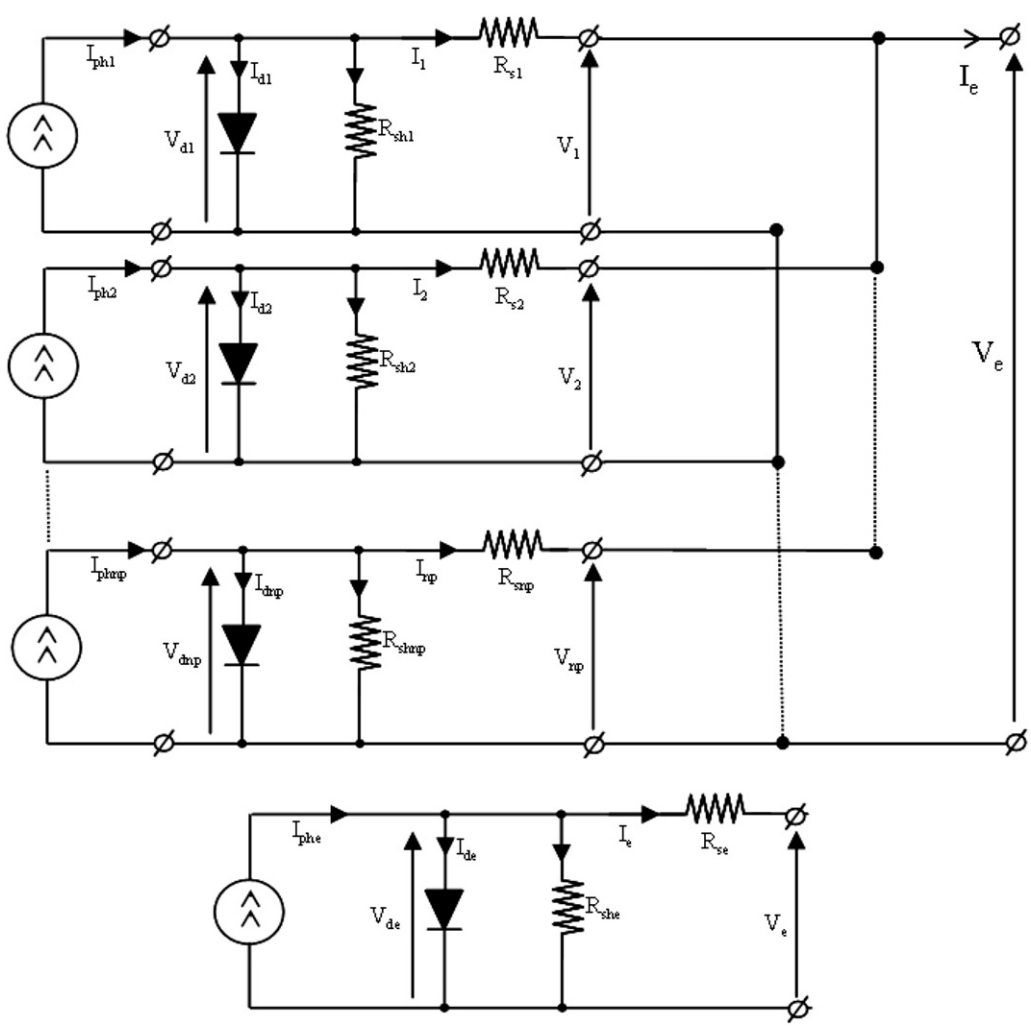

Fig. 3. Parallel–parallel connection of n_p PV cell a), and the equivalent circuit b).

$$P_e = \frac{\frac{R_{sh}}{n_p}}{\frac{R_s + R_{sh}}{n_p}}(n_p I_{ph} - n_p I_d)\ V - \frac{V^2}{\frac{R_s + R_{sh}}{n_p}} = n_p P \tag{24}$$

where P represents the output power of a PV cell.

The MPP value of the equivalent circuit means the extreme point for

$$P_{\mathrm{MPP},e} = n_p P_{\mathrm{MPP}};\ V_{\mathrm{MPP},e} = V_{\mathrm{MPP}} \tag{25}$$

where P_{MPP} and V_{MPP} represent the values of MPP for a PV cell.

A parallel–series connection of n_s identically PV cells, shown in Fig. 4a, is defined by the Brune's interconnection conditions

$$V_{de} = V_{d1} = V_{d2} = \ldots = V_{d,n_s} = V_d;\ I_e = I_1 = I_2 = \ldots = I_{n_s} = I;\ V_e = \sum_{k=1}^{n_s} V_k;\ I_{ph,e} = \sum_{k=1}^{n_s} I_{ph} \tag{26}$$

and, from Eqs. (10)–(12), for the same environmental conditions, results

$$I_{ph1} = I_{ph2} = \ldots = I_{ph,n_s} = I_{ph};\ V_1 = V_2 = \ldots = V_{n_s} = V;\ P_{in1} = P_{in2} = \ldots = P_{in,n_s} = P_{in} \tag{27}$$

For the equivalent circuit of n_s identically PV cells, shown in Fig. 4b, the Eq. (16) becomes

$$\begin{bmatrix} I_{ph,e} \\ V_e \end{bmatrix} = \begin{bmatrix} \sum_{k=1}^{n_s} I_{ph} \\ \sum_{k=1}^{n_s} V \end{bmatrix} = \begin{bmatrix} n_s I_{ph} \\ n_s V \end{bmatrix} = \begin{bmatrix} \frac{n_s}{R_{sh}} & n_s \\ n_s & -n_s R_s \end{bmatrix} \begin{bmatrix} V_d \\ I \end{bmatrix} + \begin{bmatrix} n_s I_d \\ 0 \end{bmatrix} \tag{28}$$

The equivalent hybrid matrix is

$$\mathbf{G_e} = n_s \mathbf{G} \tag{29}$$

The input power (2) of the equivalent circuit is

$$P_{in,e} = V_{d,e} I_{ph,e} = n_s V_d I_{ph} = n_s P_{in} \tag{30}$$

respectively the output power (7) for the equivalent circuit is given by

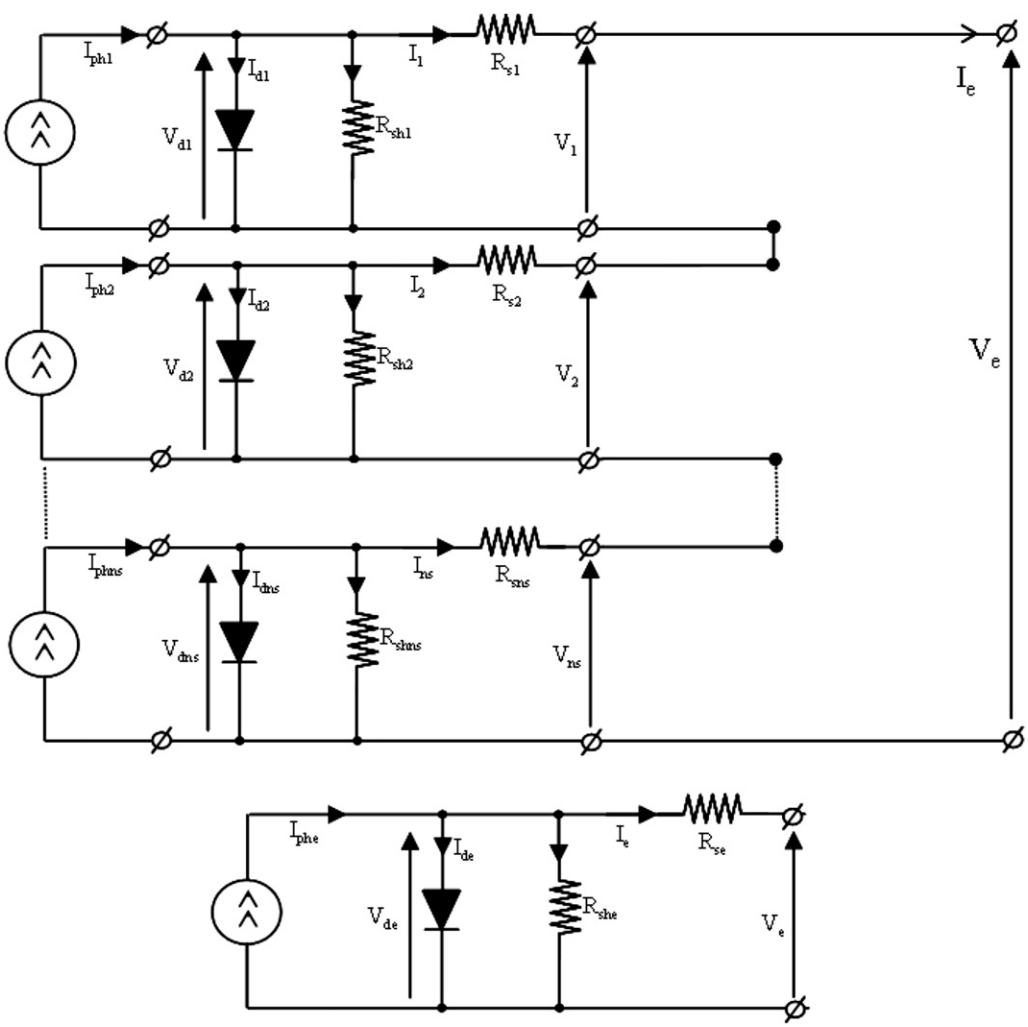

Fig. 4. Parallel–series connection of n_s *PV* cell a), and the equivalent circuit b).

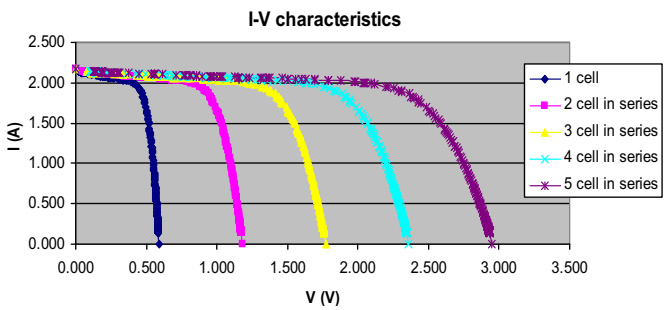

Fig. 5. *I–V* characteristics for series connection of PV cell.

$$P_e = \frac{\frac{R_{sh}}{n_s}}{\frac{R_{sh}}{n_s} + n_s R_s}(n_s I_{ph} - n_s I_d)\ n_s V - \frac{n_s^2 V^2}{n_s R_s + \frac{R_{sh}}{n_s}}$$
$$= \frac{n_s^2}{n_s R_s + \frac{R_{sh}}{n_s}}\left[\frac{R_{sh}}{n_s}(I_{ph} - I_d)V - V^2\right] \quad (31)$$

The MPP value for the equivalent circuit means the extreme point for

$$P_{\mathrm{MPP},e} = n_s P_{\mathrm{MPP}};\ V_{\mathrm{MPP},e} = n_s V_{\mathrm{MPP}} \quad (32)$$

All these equations are valid only for the particular case of identical cells and for the same environmental conditions. In other conditions, for determining the equivalent parameters, it is necessary to solve the non-linear system of Eqs. (9)–(12) for each cell and to impose the conditions (19) and (26) of the PV cells output interconnection. An experimental method for analysis of the PV panels in different conditions of irradiance is presented in Sections 5 and 6 of this paper.

3. Labview application

The characteristics of the PV cells for different connections are evaluated in the laboratories of Valahia University of Targoviste, Romania, by using a Lab View application [25–28].

In order to provide a numerical example, a PV panel with silicon monocrystalline cell Saturn has been selected. The diameter of the cell is 100 mm, the open-circuit voltage is $V_{oc} = 0.59$ V, the short-circuit current is $I_{sc} = 2.16$ A, and the maximum power point occurs at $V_{\mathrm{MPP}} = 0.48$ V, $P_{\mathrm{MPP}} = 0{,}96$ Wp. All the measurements are carried out at the solar irradiance $G = 1000$ W/m^2 and the temperature 25 °C. Figs. 5 and 6 show the current–voltage *I–V* characteristics for series and parallel connection of different number of PV cells.

The power-voltage *P–V* characteristics for the same series and parallel connection of the PV cell are illustrated in Fig. 7 and Fig. 8.

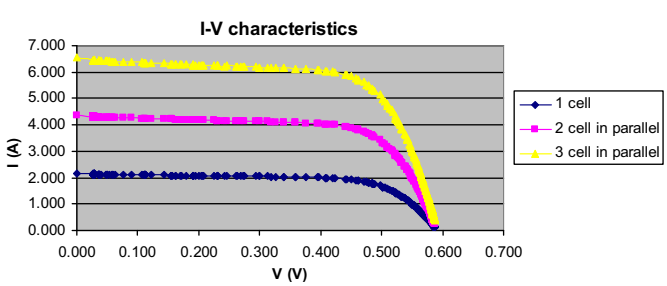

Fig. 6. *I–V* characteristics for parallel connection of PV cell.

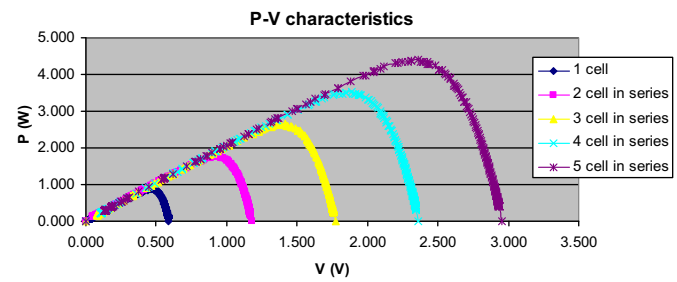

Fig. 7. *P–V* characteristics for series connection of PV cell.

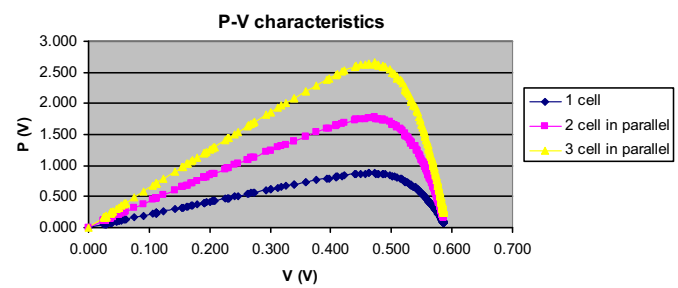

Fig. 8. *P–V* characteristics for parallel connection of PV cell.

The important data in what concerns the MPP, are extracted from all the *P–V* characteristics and are summarized in Table 1.

These experimental results represent the "references values" of the PV cells characteristics in parallel and series connections, and, in the same time, prove the theoretical considerations presented in paragraph 2, especially the relations (24)–(25), and (31)–(32).

4. Using PV array connected in grid

The importance of the renewable energy like photovoltaic systems in the generation of electricity is rapidly increasing currently. Beside the plants in a large resource, one of the main focus areas in the introduction of photovoltaic (PV) as renewable energy power source connected to the grid is the use of building surfaces for photovoltaic installations. This photovoltaic solar production in residential applications is devoted mainly to grow active power to the distribution system but also to increase the monetary value by providing ancillary services with co-management of sources and loads [29]. In these domestic applications, also hybrid solar-wind system is developed with a controlled interconnection to the low voltage grid or in stand-alone mode [30]. The PV systems are modular, hence the major advantage of these systems is that they can be simply adopted in existing buildings and can be installed anywhere. In addition, manufacturers have designed various models, which can be placed at a variety of different types of houses or buildings to achieve

Table 1
The MPP for series and parallel connection of PV cell.

Connection	MPP
1 cell	0.883 W
2 cell in series	1767 W
3 cell in series	2651 W
4 cell in series	3534 W
5 cell in series	4419 W
2 cell in parallel	1766 W
3 cell in parallel	2649 W

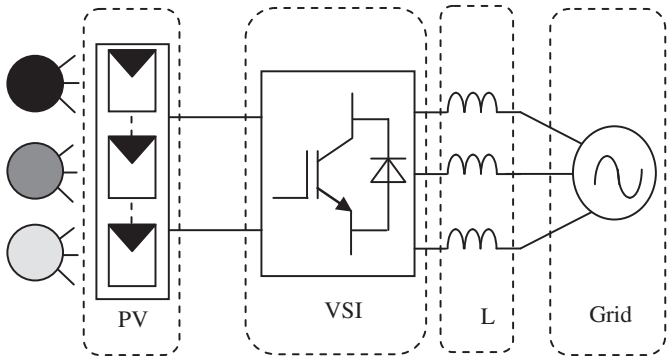

Fig. 9. Classical grid connected PV system topology.

better performance. However, performance analysis of this scheme in real conditions is generally a difficult task because several factors should be taken into account such as the partial shading.

The output power of a solar panel is a function of the temperature, the sunshine and the position of the panel. It is also function of the product of the voltage by the current. By varying one of these two parameters, voltage or current, the power can be maximized. Several MPPT methods exist in order to optimize this output power and to fix its value, in steady-state [31].

In a classical grid connected PV system topology, a series connection of photovoltaic modules is used Fig. 9, performance is negatively affected if all its modules are inhomogeneously illuminated. In this case, the relations (26), (27) and (28) cannot be used, because the resistances R_s and R_{sh} are not equal for every cell. All the modules in a series array are forced to carry the same current even though a few modules under shade produce less photocurrent. The shaded modules may get reverse biased, acting as loads and dissipates power from fully illuminated modules in the form of heat. If the system is not appropriately protected, hot-spot problem [32,33], can arise and in several cases, the system can be irreversibly damaged.

In the new trend of integrated PV arrays, it is difficult to avoid partial shading of array due to neighboring buildings throughout the day in all the seasons. This makes the performance study of partial shading of modules an important issue.

Field testing is conducted to ensure the quality of installation and the performance of the product, however is costly, time consuming and strongly dependent on actual climatic conditions. In addition, it is not without its risks since the direct employment of the PV modules for prototyping test can damage the source itself. A solution for developing experimentations without the need of real PV panels is thus very important, at least for the first stage of testing. This has increased the interest on the development of laboratory tools useful for carrying out measurements and analyses, with no need to perform field tests or to wait for particular atmospheric conditions [34].

A wide range of photovoltaic array emulators based in power converters have been proposed and developed during the past few years. Some of them without galvanic isolation [35], based on structures with low frequency transformer [36] or on HF transformers [37] and using Pulse Width Modulation (PWM) principle [38] or linear converters to avoid EMC-measurements [39]. Trying to emulate the PV current–voltage curve (I–V curve) converters amplified the curve of a reference solar cell [40] or obtained the I–V curve from a discrete table stored in a memory and then interpolated the points [41,42], but most of them used mathematical models of panel's I–V curve and calculated it from array's parameters [43–45], making possible to modify and simulate the PV curve under different situations easily.

In this paper, the development of real-time emulator of photovoltaic array based on closed-loop reference model structure is presented. With this scheme it is possible to analyze at the

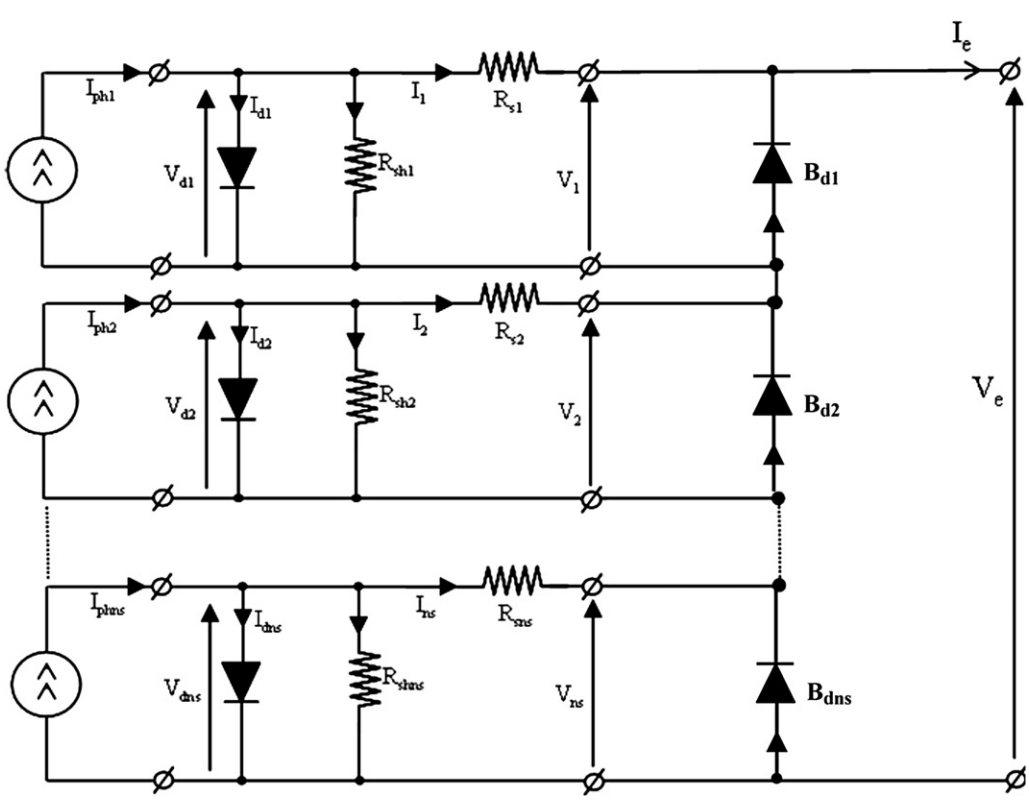

Fig. 10. Equivalent circuit model of PV array bridged by bypass.

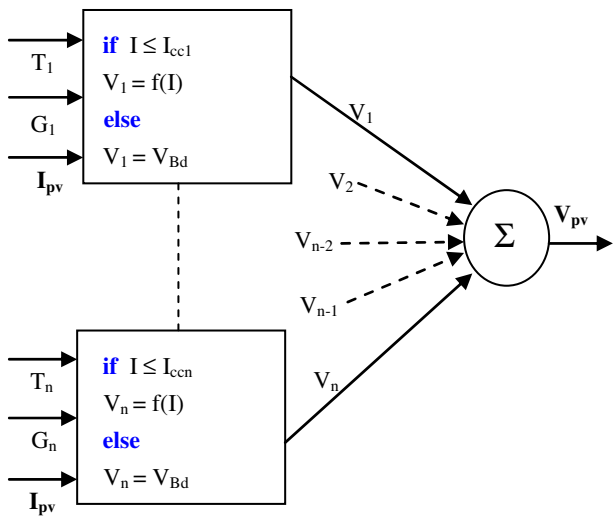

Fig. 11. Configuration synoptic when the modules are bypassed.

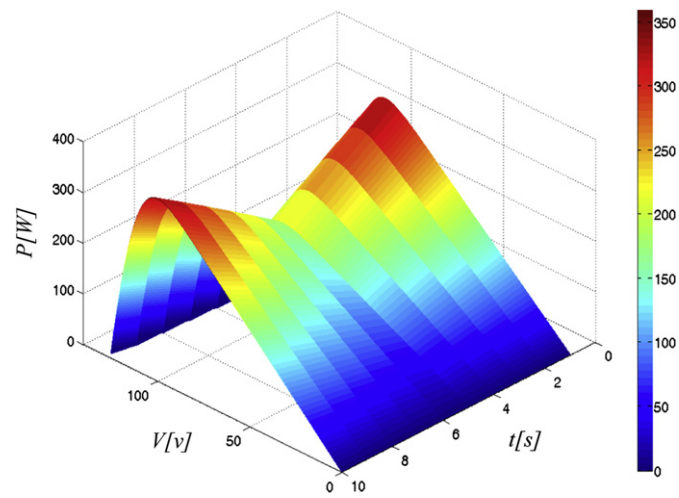

Fig. 13. 3D typical *P–V* characteristics of PV array with homogenous illumination.

laboratory the behavior of both the maximum power point tracking (MPPT) techniques and the complete photovoltaic system under special conditions like partial shading. On the other hand, the emulation of the electrical behavior of photovoltaic generators allows performance analysis of photovoltaic inverters to be carried out at the laboratory without requiring real photovoltaic energy sources. The characteristic *I–V* curve of a PV module is capitalized and the final model under partial shading conditions used in our emulator is introduced. The method for implementing a closed-loop reference model for regulating the output voltage as a function of the output current is explained. Moreover, the validity of the synthesized method is revealed through both simulation and experimental results.

A photovoltaic generator is the whole assembly of solar cells, connections, protective parts, supports etc. Two or more modules can be pre-wired together to be installed as a single unit called a PV or solar panel. Additional PV panels can be added as electricity production needs increase. The entire PV system, consisting of more panels in series connected, is known as an array (Fig. 4).

Because the series connection of the PV generator forces all modules to operate at the same current (string current), the shaded cell within a module becomes reverse biased which leads to power dissipation and thus to heating effects. To avoid thermal overload and the formation of hot spots, sub-strings of cells inside the interconnection circuit of modules are bridged by bypass diodes (Fig. 10). This measure limits the bias voltage at the shaded cell and thus the dissipated power. Another reason to use bypass diodes is to preserve more of the power output of the module in case of partial shading. For economic reasons whole strings of cells are bypassed, and therefore, even if only one cell is shaded, the whole string is affected, and produce considerably less power than it would have done without the bypass diode. This phenomenon can lead the maximum power point unexpectedly to a local maximum point.

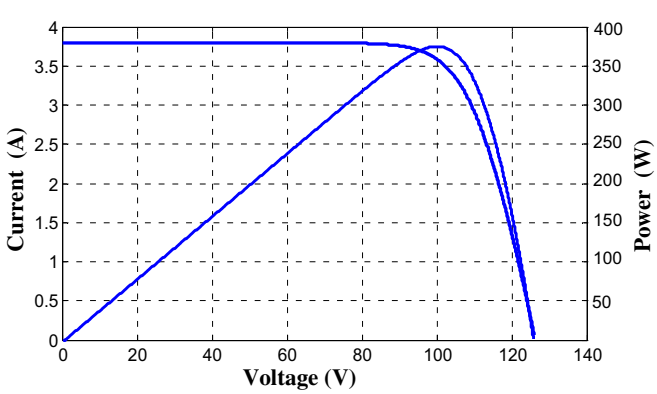

Fig. 12. Typical *I–V* and *P–V* characteristics of PV array.

5. Description of the proposed system

5.1. Model of PV array with partial shadow conditions

In order to obtain the *I–V* characteristics of the series-connected modules (series assembly) conducting a current *I*, the voltages across these modules, V_1, V_2 and V_n, are added to determine the resultant output voltage. The characteristics for series assembly are, thus, obtained internally by the software by applying similar procedure at all the points on the *I–V* curve of the series-connected modules (Fig. 11).

Thus an internal model with the whole of the parameters for each PV module is programmed under Matlab/SimulinkTM. Each PV module has two programmable inputs: temperature (Ti) and irradiance (Gi) and receive the chain current. This modular concept makes it possible to lay out the number of desired PV modules and to affect identical atmospheric parameters (Ti and Gi) in case of homogeneous irradiance or different to emulate partial shading conditions. Another remarkable advantage of the developed simulator lies in the fact that PV emulator can be interfaced straight with power converters models developed with this software or a compatible one.

5.2. Simulation and experimental results

This section describes the procedure used for simulating the *I–V* and *P–V* characteristics of a partially shaded PV array. Based on the above equations, the PV model has been implemented using Matlab/Simulink™. The Graphical-User-Interface, allows plotting the *I–V* and *P–V* characteristics of a PV array. The user has access to choose the irradiance intensity (0–1000 W/m^2), the cell temperature, as well as the number of panels in series, which form the string and the number of strings in parallel. These options offer a very high flexibility and a wide range of different PV plant configurations with different voltage and current levels can be

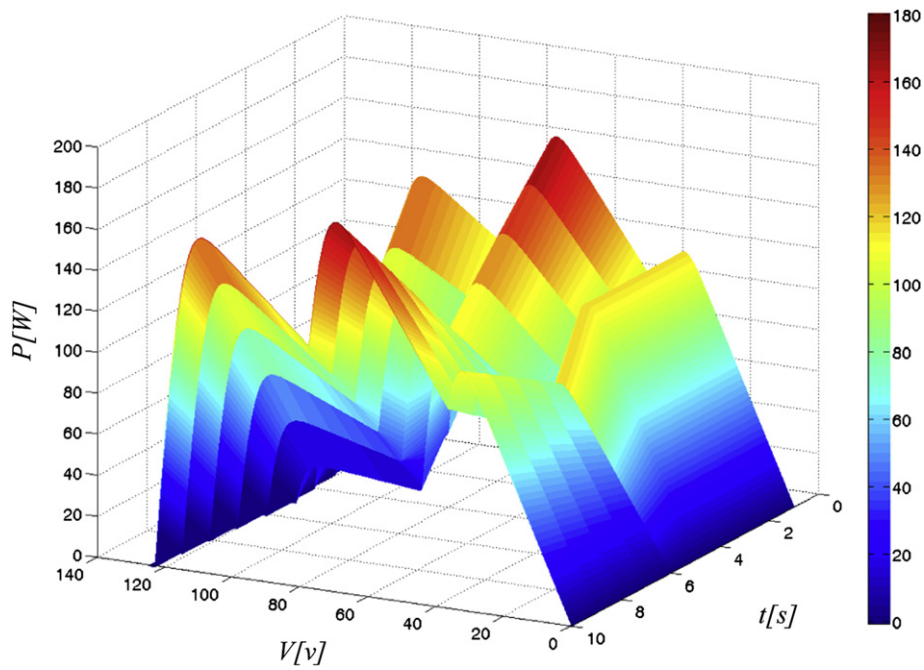

Fig. 14. 3D *P–V* characteristics of PV array with three irradiance levels.

simulated. Furthermore, the effects of the partial shading can be visualized by choosing the irradiance level. Modeling the partial shading effects has been made based on the assumption that every module has its own bypass diode.

Firstly, all simulations are based on a configuration of a PV array with three modules MSX120 120-W in series. Each PV module considered in this paper is comprised of 72 PV cells connected in series providing an open-circuit voltage equal to 42.1 V and a short-circuit current equal to 3.87 A. Fig. 12 shows the *I–V* and *P–V* simulation characteristics of the emulating operation mode under homogeneous illumination. Fig. 13 describes 3D typical *P–V* characteristics of PV array. The label on *x* axis represents the time variation while the irradiance level evolves linearly. Irradiance drops down linearly from 1000 W/m^2 at *t* equal 1 s up to 500 W/m^2 for *t* equal 5 s and vice versa during 5 s. In shadow conditions (Fig. 14) the PV modules are subjected to the same temperature (25 °C) but at three irradiance levels (1000 W/m^2, 700 W/m^2 and 400 W/m^2). The time and irradiance variations are similar to the preceding case for the third PV module. For the second PV module, irradiance drops down linearly from 700 W/m^2 up to 400 W/m^2 during the same time variation. For the third PV module, irradiance is constant between 1 s and 5 s then drops down linearly from 1000W/m^2 up to 400 W/m^2 in 5 s. If the three PV modules receive an inhomogeneous irradiation, *P–V* characteristics have several

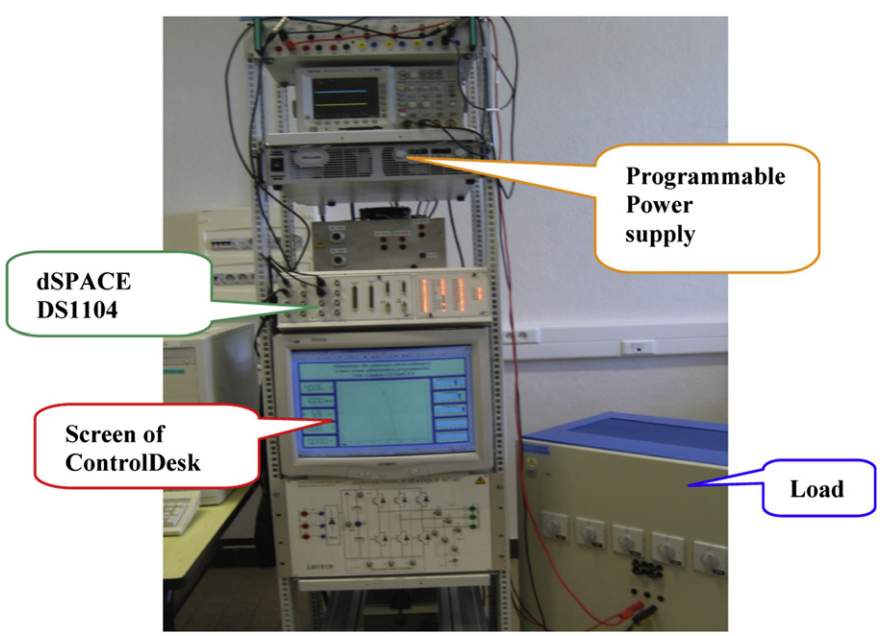

Fig. 15. Photovoltaic experimental test bench structure.

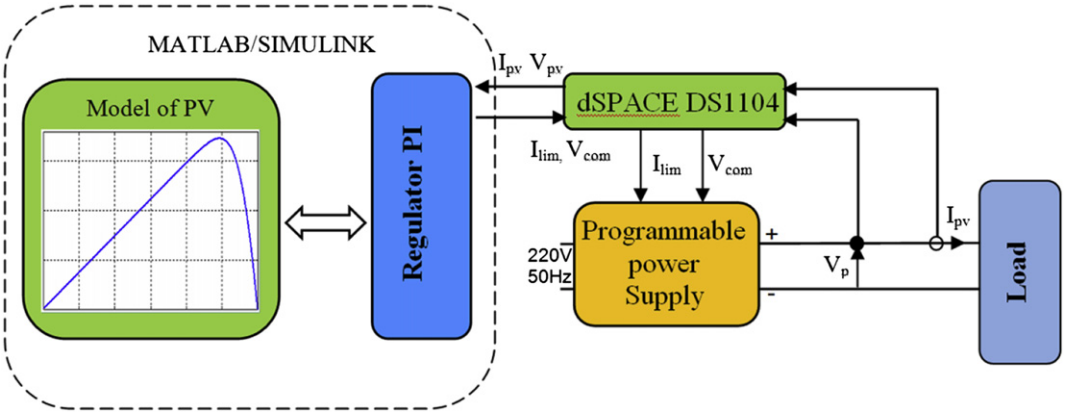

Fig. 16. Control synoptic of the experimental test bench structure.

local maximum power points. In this configuration appear two major difficulties which are the discrimination of the optimal point of power and how to extract the maximum power from each module. In the latter case, it is an average power of these three modules which is produced. To solve this problem, a solution consists in introducing a DC–DC converter at the exit of each PV module in order to authorize a real individual MPPT.

The real-time emulator of photovoltaic experimental test bench used was developed in LAII-ENSIP laboratory, university of Poitiers (Figs. 15 and 16). It was achieved with a programmable power supply: TDK-Lambda GEN300-11. The control strategy is implemented using a single-board DS1104 manufactured by dSPACE Company and developed under the integrated development environment of Matlab/Simulink™ RTW provided by The MathWorks Inc. The control is achieved by two PI regulators with reference model and uses feedback of outputs voltage and current to regulate the operating point for the connected load.

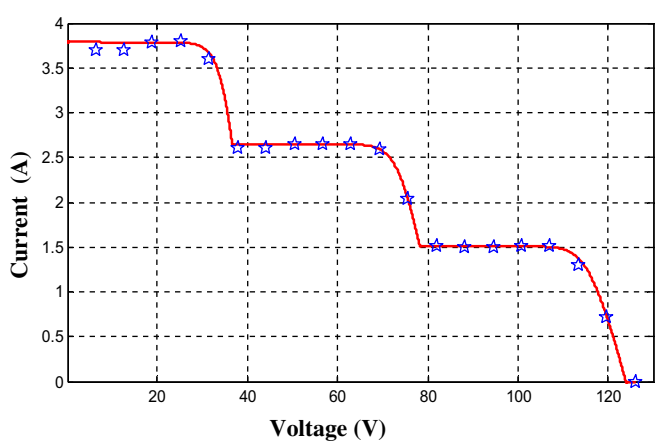

Fig. 17. *I–V* characteristics of PV array with three irradiance levels: theoretical (solid line); experimental (stars).

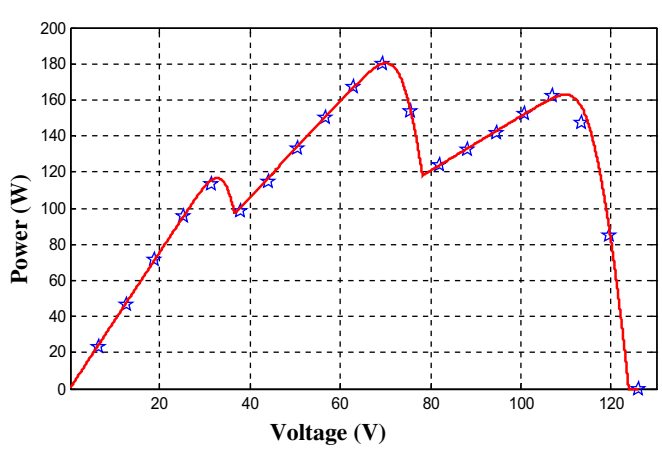

Fig. 18. *P–V* characteristics of PV array with three irradiance levels: theoretical (solid line); experimental (stars).

Figs. 17 and 18 show respectively the *I–V* and *P–V* characteristics for three irradiance levels or shadow conditions: 1000 W/m^2, 700 W/m^2 and 400 W/m^2. Red solid line corresponds to the reference model results and blue stars are experimental points. In both cases, the real-time emulator output follows perfectly the trajectories of the statement PV arrays for the three shadow conditions.

6. Conclusion

In this paper, the performance of PV systems has been quantified by using the matrix equations and interconnection conditions for equal matching and equal irradiance of PV cell, and by using a real-time emulator for PV array with three irradiance levels.

A new set of matrix equations that describe the behavior of PV cell is presented. The equivalent parameters and the MPP of the PV system for each type of cell connection are calculated. The example presented has shown some comparisons between the PV systems in different connection. The method can be extended to multiple connections of the PV cells to increase the efficiency of the system. Thereafter, a real-time emulator of photovoltaic array based on closed-loop reference model structure is investigated. Thanks to this emulator, it is possible to analyze the behavior of PV array and also to work out the MPPT techniques in case of partial shading. Real time implementation with at single-board dSPACE DS1104 gives excellent results and dynamic characteristic much lower than the climatic variations since its band-width is equal at 10 Hz. Now, new algorithms are in progress in order to fit to its conditions and to detect the true point of maximum power.

References

[1] Luque A. Handbook of photovoltaic science and engineering. New York: Wiley; 2003.
[2] Povlsen AF. Impact of power penetration from photovoltaic power system in distribution network. Report IEA-PVPS Task 5, http://www.hme.ca/gridconnect/IEA_PVPS_Task_5-10_Impacts_of_PV_Power_Penetration.pdf; 2002.
[3] Reinders AHME, van Dijk VAP, Wiemken E, Turkenburg WC. Technical and Economical analysis of grid-connected PV systems by means of simulation. Prog Photovoltaic: Research Applications 1999;7:71–82.

[4] Andrei H, Dogaru V, Chicco G, Cepisca C, Spertino F. Photovoltaic applications. J Mater Process Technol 2007;181(1–3):267–73. Elsevier.
[5] Altas IH, Sharaf AM. A novel on-line MPP search algorithm for PV arrays. IEEE Trans Energy Convers 1996;11(4):748–54.
[6] Rodriguez C, Amaratunga GAJ. Analytic solution to the photovoltaic maximum power point problem. IEEE Trans. Circuits Syst 2007;54(9):2054–60.
[7] Almonacid F, Rus C, Pérez-Higueras P, Hontoria L. Calculation of the energy provided by a PV generator. Comparative study: conventional network vs. artificial neural networks. Energy 2011;36:375–84.
[8] Wang YJ, Hsu PC. An investigation on partial shading of PV modules with different connection con of PV cells. Energy 2011;36:3069–78.
[9] Nelson J. The physics of solar cells. London: Imperial College Press; 2003.
[10] Alonso-Garcia MC, Ruiz GM. A model for the series-parallel association of photovoltaic devices. Prog Photovoltaics: Research Applications 2006;14(3):237–47.
[11] Batrinu F, Carpaneto E, Chicco G, Gagliano S, Spertino F, Tina GM. Assessing the performances of photovoltaic sites and grid-connected systems: a study case. In: Proceedings of the Sixth World Energy System Conference, Torino-WESC'6, 2006, 386–393.
[12] Jaboori MG, Saied MM, Hanafy AR. A contribution to the simulation and design optimization of photovoltaic systems. IEEE Trans Energy Convers Sep. 1991;6(3):401–6.
[13] Campbell RC. A circuit-based photovoltaic array model for power system studies. Proc. 39th North American NAPS'07, Sep. 30–Oct. 2, 2007, pp. 97–101.
[14] Bialasiewicz JT. Renewable energy systems with photovoltaic power generators: operation and modeling. IEEE Trans Ind Electron Jul. 2008;55(7):2752–8.
[15] Spertino F, Sumaili J. Are manufacturing I–V mismatch and reverse currents key factors in large photovoltaic arrays? IEEE Trans Ind Electron Nov. 2009; 56(11):4520–31.
[16] Willems JC. Terminals and ports. IEEE Circuits Syst Magazine 2010;10(4): 8–26. Fourth Quarter.
[17] Bayoud-Rujula A, Lorente-Lafuente AM, Cirez F. Environmental assessment of grid connected photovoltaic plants with 2-axis tracking versus fixed modules systems. Energy 2011;36:3148–58.
[18] Chua LO, Pin PM. Computer aided analysis of electronics circuits. Englewood Cliffs, New Jersey: Prentice Hall Inc.; 1975.
[19] Lin PM. Symbolic method analysis. Studies in electrical and electronic engineering. Amsterdam, Oxford, New-York, Tokyo: Science Publishing Company Inc.; 1991.
[20] Preda M, Spinei F, Andrei H, Popovici D. Canonical network functions and their topological determination. Revue Roumaine des Sci Tech serie Electrotechnique Energetique 1991;2:181–91.
[21] Sumaili J, Spertino F, Andrei H, Chicco G. Characterization of the photovoltaic array parameters from the transient charge of a capacitor. In: Proceedings of the 6th Japanese-Mediterranean Workshop on Applied Electromagnetic Engineering for Magnetic, Superconducting and Nano Materials - JAPMED'6, Bucharest, 2009, 243–245.
[22] Gow JA, Manning CD. Development of a photovoltaic array model for use in power-electronics simulation studies. IEE Electr Power Appl 1999;146(2):193–200.
[23] Desoer CA, Kuh ES. Basic circuit theory. New York: Mc Grew Hill Book Company; 1969.
[24] Franco S. Electric circuit fundamentals. New-York, London: Saunders College Publishing, Harcourt Brace College Publishing; 1995.
[25] Lab view - data acqustions basics manual. National Instruments, http://www.ni.com/trylabview/; 1998.
[26] Dogaru V, Cepisca C, Andrei H, Ionel M. Power measurements with Lab view. In: Proceedings of IEEE-AQTR. International Conference on Automation, quality and testing, Robotic, Cluj-Napoca, 1: 2004, 489–491.
[27] Xiao W, Lind MGJ, Dunford WG, Capel A. Real-time identification of optimal points in photovoltaic power systems. IEEE Trans Ind Electron 2006;53(4): 1017–26.
[28] Canova A, Giaccone L, Spertino F, Tartaglia M. Electrical impact of photovoltaic plant in urban distributed network. ProceedingS Sixth World Energy Syst Conf, Torino-WESC'6, 2006, 381–385.
[29] Clastres C, Ha Pham TT, Wurtz F, Bacha S. Ancillary services and optimal household energy management with photovoltaic production. Energy 2010; 35:55–64.
[30] Dali M, Belhadj J, Roboam X. Hybrid solar-wind system with battery storage operating un grid-connected and standlone mode: control and energy management – experimental investigation. Energy 2010;35:2587–95.
[31] Liao CC. Genetic *K*-means algorithm based RBF network for photovoltaic MPP prediction. Energy 2010;35:529–36.
[32] Herrmann W, Wiesner W, Waassen W. Hot spots investigations on PV modules, new concepts for a test standard and consequences for module design with respect to by-pass diodes. Proceedings26th IEEE Photovoltaic Specialists Conf, 1997, pp. 1129–1132.
[33] Klenk M, Keller S, Weber L, Marckmann C, Boueke A, Nussbaumer H et al. Investigation of the hot-spot behavior and formation in crystalline silicon Power cells, PV in Europe, From PV technology to energy solutions. Proceedings Of the International Conference, 2002, pp. 272–275.
[34] Patel H, Agarwal V. MATLAB-based modeling to study the effects of partial shading on PV array characteristics. IEEE Trans Energy Convers 2008;32(1): 302–10.
[35] Sera D, Teodorescu R, Rodriguez P. PV panel model based on datasheet values. Proceedings IEEE Intern Symp Indus Electron.-ISIE 07 Vigo Spain, 2007, pp. 2392–2396.
[36] Mukerjee AK, Dasgupta N. DC power supply used as photovoltaic simulator for testing MPPT algorithms. Renew Energy 2007;32:587–92.
[37] Enrique JM, Duran E, Sidrach-de-Cardona M, Andujar JM, Bohorquez MA, Carratero J. A new approach to obtain I–V and P–V curves of photovoltaic modules by using DC/DC converters. Rec. IEEE Photo. Spec. conf., 2005, pp. 1769–1772.
[38] Di Piazza MC, Serporta C, Vitale G. A DC/DC converter based circuit model for a solar photovoltaic array. Rec. 21th Eur. Photovoltaic Solar Energy Conference and Exhibition, Dresden, Germany, 2006, pp. 2726–2731.
[39] Sanchis P, Echeverria I, Ursua A, Alonso O, Gubia E, Marroyo L. Electronic converter for the analysis of photovoltaic arrays and inverters. Proceedings IEEE 34th Power Electro. Spec Conf, vol. 4, 2003, pp. 1748–1753.
[40] Zeng Q, Song P, Chang L. A photovoltaic simulator based on DC chopper. Proceedings IEEE Canadian Conf. on Electro. and Comp. Engin., Winnipeg, Canada, 2002, pp. 257–261.
[41] Kang FS, Park SJ, Cho SE, Kim JM. Photovoltaic power interface circuit incorporated with a buck-boost converter and a full-bridge inverter. Appl Energy 2005;82:266–83.
[42] Cirrincione M, Di Piazza MC, Marsala G, Pucci M, Vitale G. Real time simulation of renewable sources by model-based control of DC/DC converters. Proceedings IEEE Intern. Symp. On Indus. Electron.-ISIE 08, Cambridge, UK, 2008, pp. 1548–1555.
[43] Koutroulis E, Kalaitzakis K, Voulgaris NC. Development of a microcontroller-based photovoltaic maximum power point tracking control system. IEEE Trans Power Electro Jan. 2001;16(1):46–54.
[44] Walker G. Evaluating MPPT converter topologies using a MATLAB PV model. Jour Electr Electron Eng Aust 2001;21(1):49–56.
[45] Gautam NK, Kaushika. An efficient algorithm to simulate the electrical performance of solar photovoltaic arrays. Energy 2002;27:347–61.